REFRIGERATION SCHEDULE

UNIT	No. COMP	COMP/ TON	COMP HP	REFRIGERANT	VA REF	REMOTE	SELF CONTAINED	LOCATION	AIR COOLED	WATER COOLED
AC1	1	2	2	22	PENN 400	X	–	ROOF	X	–
AC2	1	1 1/2	1 1/2	22	PENN 400	X	–	ROOF	X	–

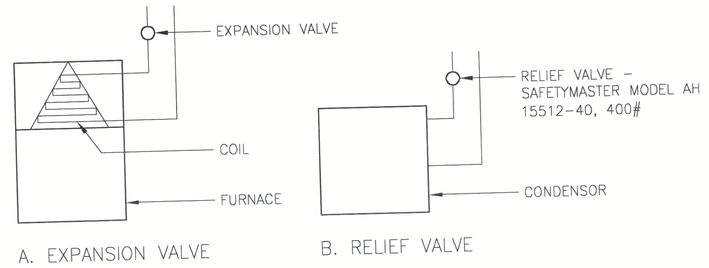

A. EXPANSION VALVE B. RELIEF VALVE

5 REFRIGERATION DIAGRAMS
NOT TO SCALE

REFRIGERATION NOTES:

1. INSTALL PRESSURE RELIEF VALVE ON HIGH PRESSURE SIDE OF SYSTEM, UPSTREAM OF ANY INTERVENING VALVES.

2. REMOVE EXPANSION VALVES, DEVICES, & CONNECTIONS FROM AIR STREAM.

2. REFRIGERATION PIPING TO BE TYPE "K" COPPER.

4. ALL CONNECTIONS AND DEVICES TO BE BRAZED.

5. PIPING SHALL BE 3/4" & 3/8" TYPE 'K' COPPER, .032 THICKNESS.

6. SEE NEW EQUIPMENT, BELOW, RIGHT FOR SCHEDULE & LEGEND OF REFRIGERATION/AC SYSTEMS.

7. SEE DETAILS, LEFT, FOR REFRIGERATION VALVE DIAGRAMS.

GENERAL NOTES:

1. SEE SHEET A1.2 FOR FIRST FLOOR NATURAL LIGHT/VENTILATION SCHEDULE.

2. SEE SHEET A1.3 FOR SECOND AND LOFT LEVEL NATURAL LIGHT/VENTILATION SCHEDULE.

3. SEE SHEET A1.2 FOR HEATING SCHEDULE.

CITY OF CHICAGO VENTILATION NOTES

1. NOISE LEVEL OF ALL HVAC EQUIPMENT SHALL NOT EXCEED 55 DECIBELS AT LOT LINE.

2. ALL DUCTS SHALL BE FABRICATED OF SHEET METAL, ACCORDING TO SMACNA STANDARDS.

3. FRESH AIR INTAKE SHALL BE A MINIMUM OF 15'-0" FROM CONTAMINANTS, AND A MINIMUM OF 10'-0" ABOVE GRADE.

4. ALL FLEXIBLE DUCTWORK SHALL BE APPROVED BY THE CITY OF CHICAGO, SHALL BE INSULATED, SHALL BE USED FOR LOW PRESSURE SYSTEMS, AND SHALL NOT EXCEED 5'-0" IN LENGTH.

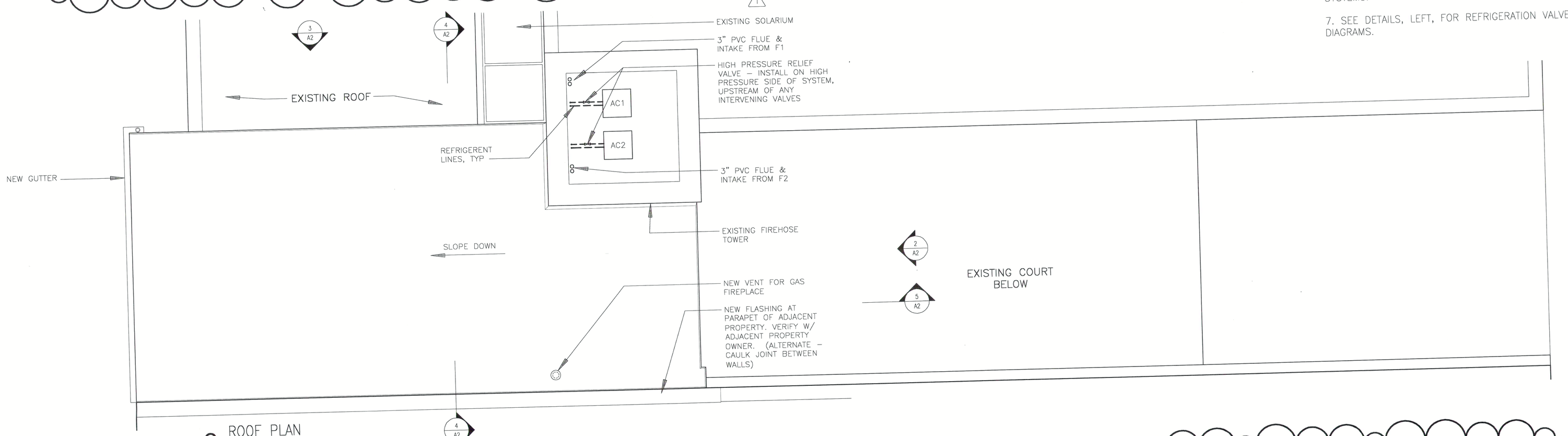

2 ROOF PLAN
1/4"=1'-0"

NEW EQUIPMENT LEGEND

F1 – "TRANE" FURNACE MODEL TUX060C936
60,000 BUT INPUT, 56,000 BUT OUTPUT
115/1/60 800 CFM 1.14 AMPS

F2 – "TRANE" FURNACE MODEL TUX040C924
40,000 BUT INPUT, 38,000 BTU OUTPUT
115/1/60 600 CFM 1.14 AMPS

AC1 – "TRANE" CONDENSER MODEL TTR025C100A
22,500 BTU R22
208/230/1/60 11.6 AMPS 136#, 2 TONS

AC2 – "TRANE" CONDENSER MODEL TTR018D100A
17,500 BTU R22
208/230/1/60 8.0 AMPS 136#, 1 1/2 TONS

C1 – "TRANE" COOLING COIL MODEL CCBA24A4ACC
22,200 BTU 800 CFM

C2 – "TRANE" COOLING COIL MODEL CCBA18A4ACC
17,100 BTU 600 CFM

H1 – "APRILAIRE" HUMIDIFIER MODEL 700
115/1/60 .08 AMPS 0.75 GPH

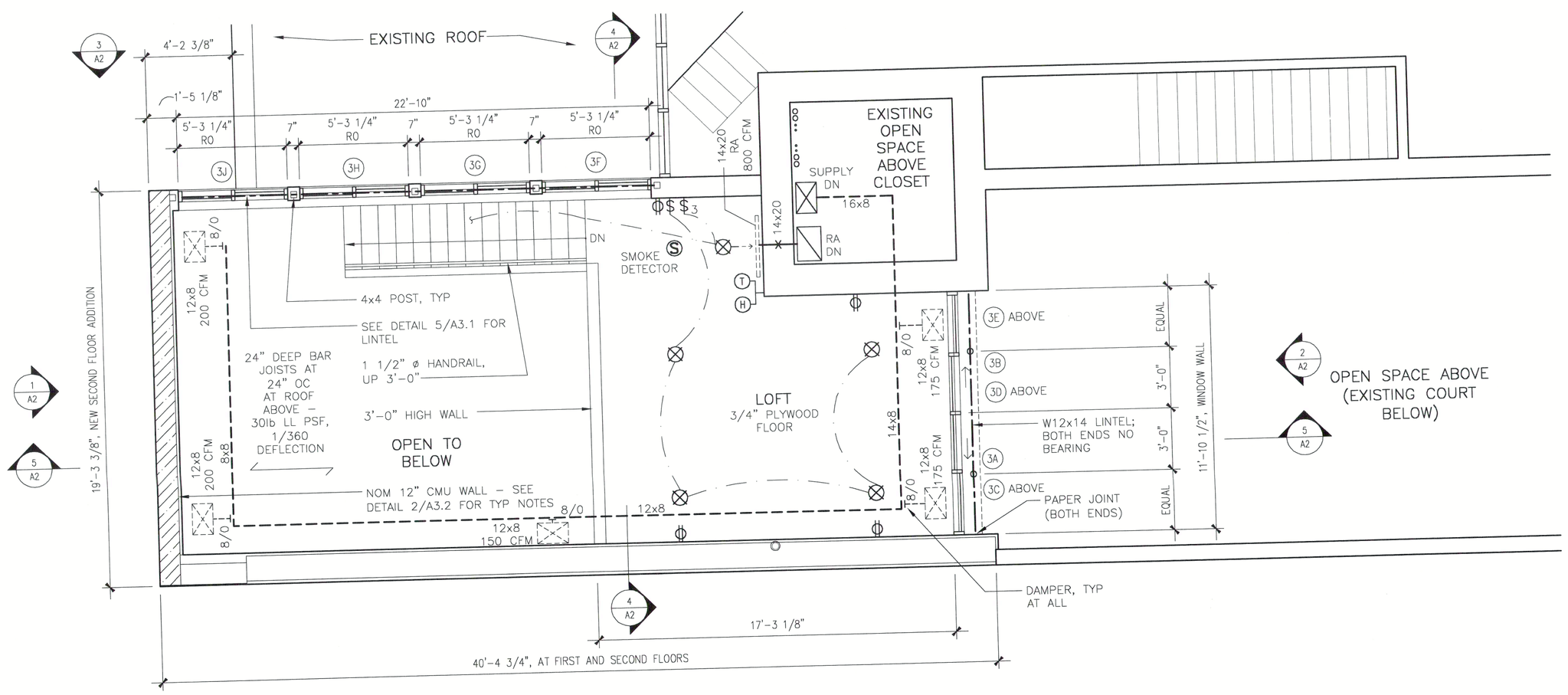

1 BALCONY FLOOR PLAN
1/4"=1'-0"

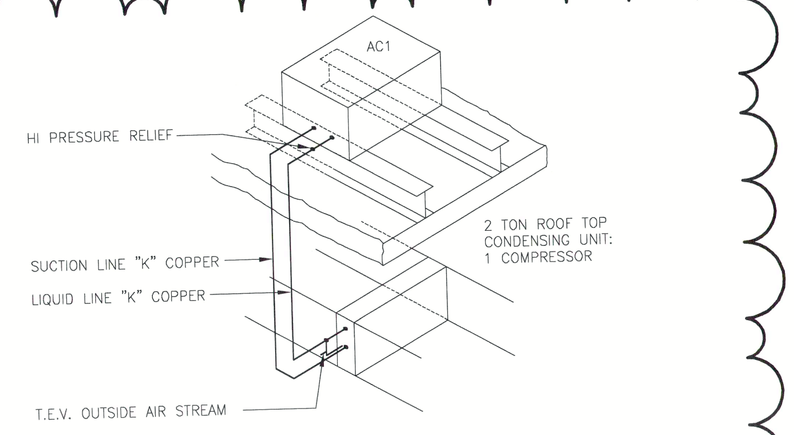

4 REMOTE REFRIGERATION PIPING DIAGRAM – AC1
NOT TO SCALE

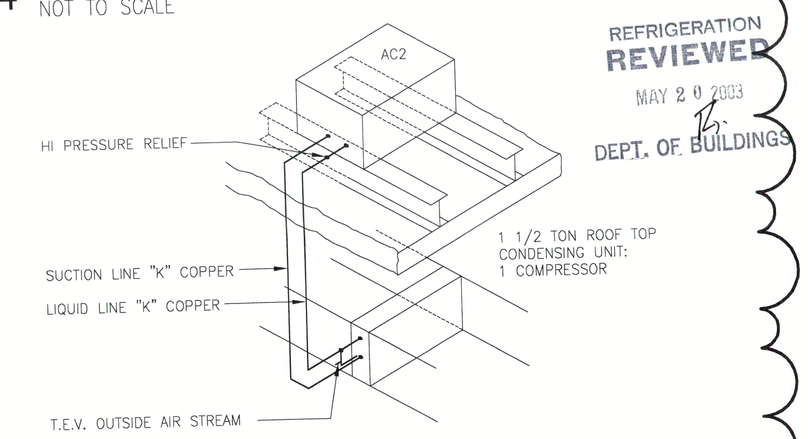

3 REMOTE REFRIGERATION PIPING DIAGRAM – AC2
NOT TO SCALE

REFRIGERATION REVIEWER
MAY 20 2003
DEPT. OF BUILDINGS

STATE OF ILLINOIS LEONARD WISNIEWSKI 6257 LICENSED ARCHITECT

ISSUED FOR PERMIT

No.	Date	Issue
1	05.13.03	PERMIT REVISIONS
	04.28.03	ISSUED FOR PRICING
	03.17.03	PERMIT REVISIONS
	01.08.03	PERMIT REVISIONS

1242–1244 N. WELLS ST. BLDG.

CHICAGO, IL

LEONARD WISNIEWSKI, ARCHITECT

2834 N. STATE ROUTE ONE
MARTINTON TOWNSHIP, ILLINOIS 60951
TEL: 815.428.7556

LOFT FLOOR PLAN, ROOF PLAN, EQUIPMENT SCHEDULE AND VENTILATION NOTES

Scale: 1/4 = 1'-0"
Date: 10.15.02
File: 0205\A1-4

A1.4